VALVOLA RIDUTTRICE DI PRESSIONE
DIRECT ACTING, PRESSURE REDUCING/RELIEVING VALVE

PRDB

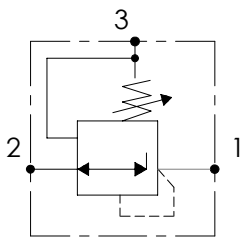

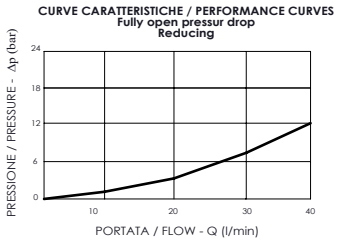

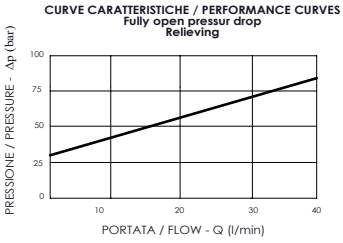

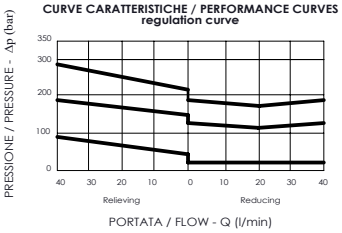

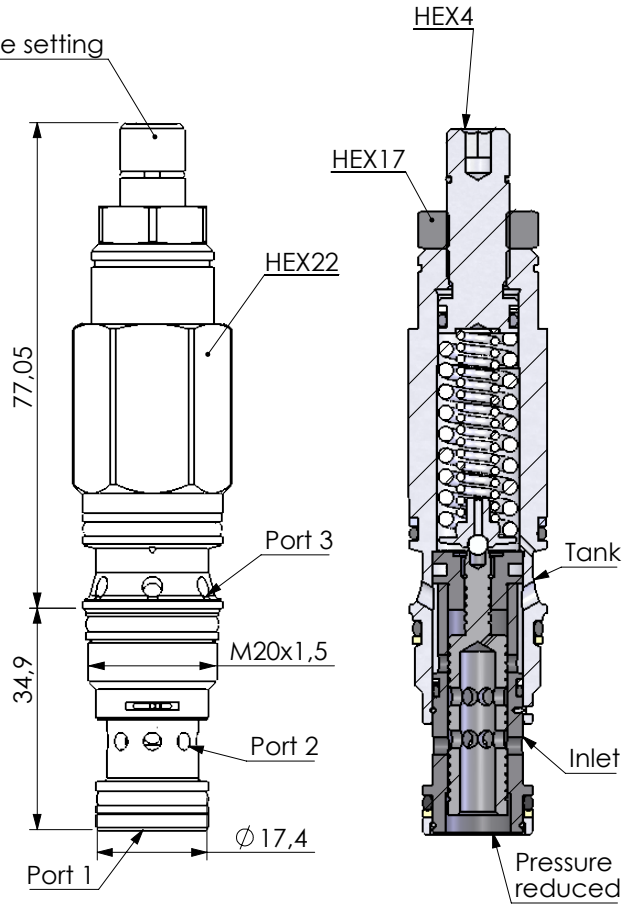

CODICE SEDE	CAVITY CODE
SUN cavity interchange, SIZE T-11A	

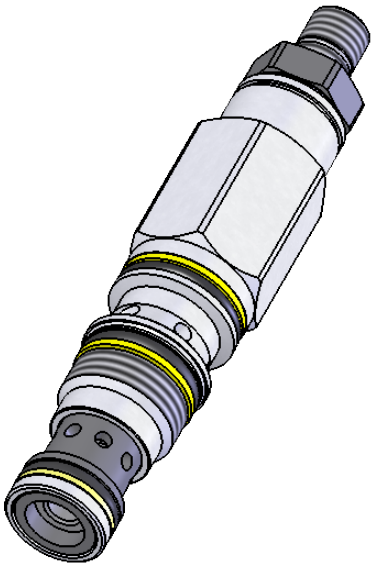

DESCRIZIONE	DESCRIPTION
valvola riduttrice di pressione con funzione di valvola di massima.	Direct acting, pressure reducing/relieving valves reduce a high primary pressure at the inlet (port 2) to a constant reduced pressure (at port 1), with a full-flow relief function form port 1 to tank (port 3).

Maximum Valve leakage at 110 SUS (24 cSt)	30 cc/min
Fluid range temperature	-20°C to 100°C
Fluids	Mineral-based or synthetics with lubricating properties at viscosities of 10 to 500 mm^2/s (cSt)
Recommended degree of fluid contamination	Nominal value max. 10 µm (NAS 8) / ISO 4406 19/17/14

COPPIA DI SERRAGGIO	INSTALLATION TORQUE
41-47 N*m	

CODICE ORDINAZIONE PIOMBATURA	SEALING ORDERING CODE
-	

CODICE ORDINAZIONE	RAPPORTO DI PILOTAGGIO	CAMPO DI TARATURA	TARATURA STANDARD	INCREMENTO PER GIRO	PORTATA MASSIMA	PRESSIONE MAX	PESO
ORDERING CODE	PILOT RATIO	PRESSURE RANGE	STANDARD SETTING	PRESSURE INCREASE	MAX FLOW	MAX PRESSURE	WEIGHT
PV10411.00.00	-	35-210 bar	50 bar	~31.5 bar/turn	40 l/min	350 bar	0.19 kg
-	-	-	-	-	-	-	-